2/12 Neild Avenue Rushcutters Bay, NSW 2010 AUSTRALIA
P +61 2 8755 2300 | F +61 2 8755 2350 | E info@skheme.com

skheme®

Avenue

AVENUE is a hybrid of stone and limestone look tiles. With subtle movement and colour variation which can be applied for internal wall and floors.

PRODUCT TYPE:	Glazed Porcelain
COLOURS:	White, Mist, Fawn and Stone
SIZES:	300x300mm, 300x600m, 600x600mm and 450x900mm* Rectified Edges
FINISHES/USAGE:	Matt, and Grip/Wall and Floor
AESTHETIC QUALITIES:	Limestone look
TECHNICAL INFO:	Matt - P2 Pendulum Slip rating Grip - P5 Pendulum Slip rating More information on last page
VARIATION:	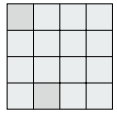 V2

Variation is an inherent property of tiles and stone. Sizes are nominal and may include a joint. Visit https://www.skheme.com/about-us/terms-and-conditions/ for more information.

2/12 Neild Avenue Rushcutters Bay, NSW 2010 AUSTRALIA
P +61 2 8755 2300 | F +61 2 8755 2350 | E info@skheme.com

skheme®

Avenue

PRODUCT SPECIFICATIONS

SIZES	FINISHES	TILE EDGE	SLIP RATING
300x300mm	MATT	RECTIFIED	P2 Pendulum
300X600mm	MATT	RECTIFIED	P2 Pendulum
600x600mm	MATT	RECTIFIED	P2 Pendulum
300x600mm	GRIP	RECTIFIED	P5 Pendulum
450x900mm*	MATT	RECTIFIED	P2 Pendulum

* Indent item - Subject to stock availability overseas, please allow 10-12 weeks lead time from date of order confirmation. Minimum quantity may apply.

FORMATS

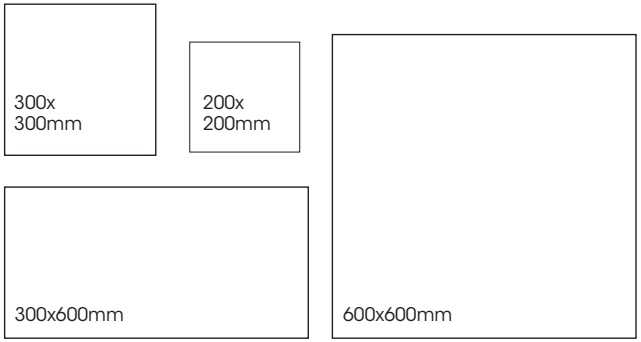

WHITE

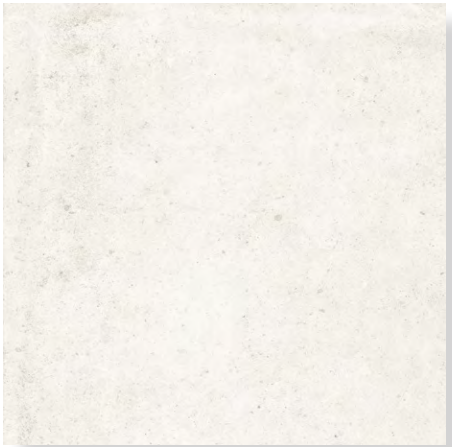

MATT

FAWN

MATT

GRIP

Variation is an inherent property of tiles and stone. Sizes are nominal and may include a joint.

2/12 Neild Avenue Rushcutters Bay, NSW 2010 AUSTRALIA
P +61 2 8755 2300 | F +61 2 8755 2350 | E info@skheme.com

skheme®

Avenue

PRODUCT SPECIFICATIONS

SIZES	FINISHES	TILE EDGE	SLIP RATING
300x300mm	MATT	RECTIFIED	P2 Pendulum
300X600mm	MATT	RECTIFIED	P2 Pendulum
600x600mm	MATT	RECTIFIED	P2 Pendulum
300x600mm	GRIP	RECTIFIED	P5 Pendulum
450x900mm*	MATT	RECTIFIED	P2 Pendulum

* Indent item - Subject to stock availability overseas, please allow 10-12 weeks lead time from date of order confirmation. Minimum quantity may apply.

FORMATS

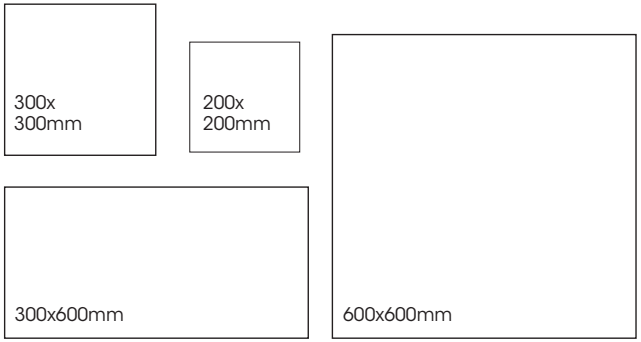

MIST

MATT

GRIP

STONE

MATT

GRIP

Variation is an inherent property of tiles and stone. Sizes are nominal and may include a joint.

2/12 Neild Avenue Rushcutters Bay, NSW 2010 AUSTRALIA
P +61 2 8755 2300 | F +61 2 8755 2350 | E info@skheme.com

skheme®

Avenue

Variation is an inherent property of tiles and stone. Sizes are nominal and may include a joint.

2/12 Neild Avenue Rushcutters Bay, NSW 2010 AUSTRALIA
P +61 2 8755 2300 | F +61 2 8755 2350 | E info@skheme.com

skheme®

Avenue

TECHNICAL DATA

technical characteristics	test method	required values	value
water absorption	iso 10545-3	0,5% < E ≤ 3%	-
breaking strength (S)	iso 10545-4	≥ 1300 N	pass
thermal shock resistance	iso 10545-9	no visible defects	pass
chemical resistance	iso 10545-13	Class A	pass
length and width of the average sizes	iso 10545-2	± 0,5%	pass
thickness	iso 10545-2	± 0,5%	pass
straightness of sides	iso 10545-2	± 0,5% and ±1.5mm	pass
surface quality	iso 10545-2	minimum of 95% of tiles free from visible defects	pass

Please note that all products must be fabricated using score & snap method and/or wet cutting in conjunction with AS/NZS 1716:2012, AS/NZS 1715:2009, AS/NZS 60335.2.69:2017" For more information please refer to: https://www.safework.nsw.gov.au

Variation is an inherent property of tiles and stone. Sizes are nominal and may include a joint.